Iveco Daily 3000 H1/H2 1999

0 20 50 cm.

# Vankit Ref - IVD 001

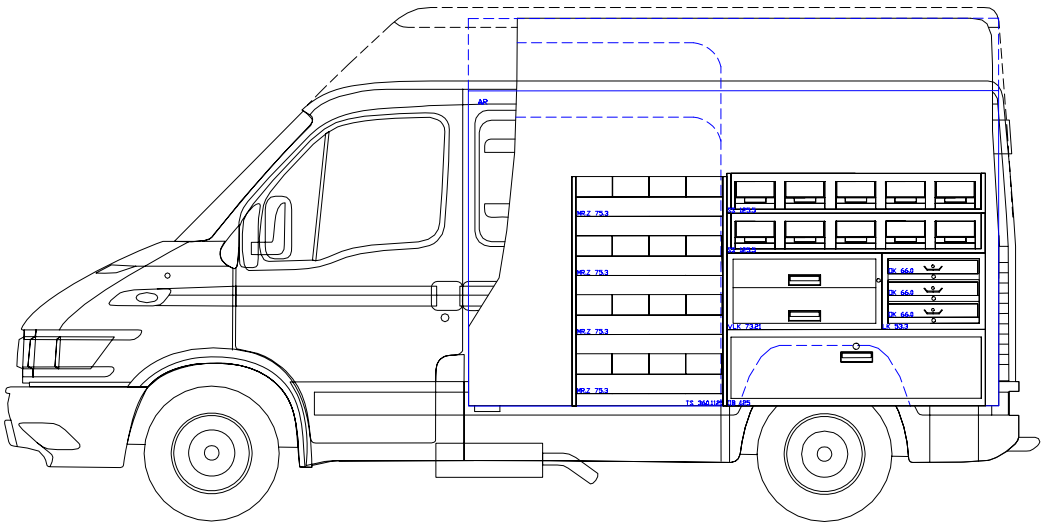

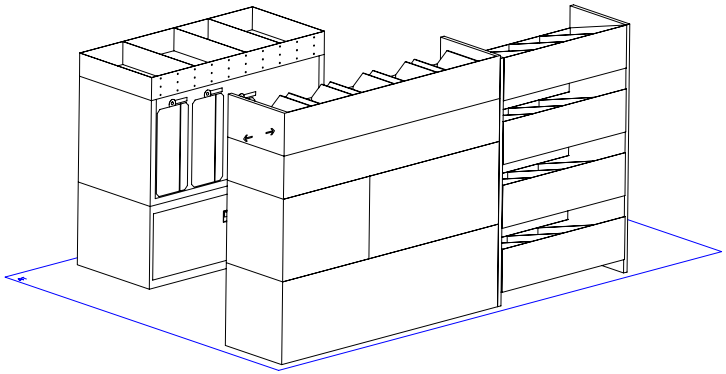

copyright 2009
Vankit (UK) Ltd

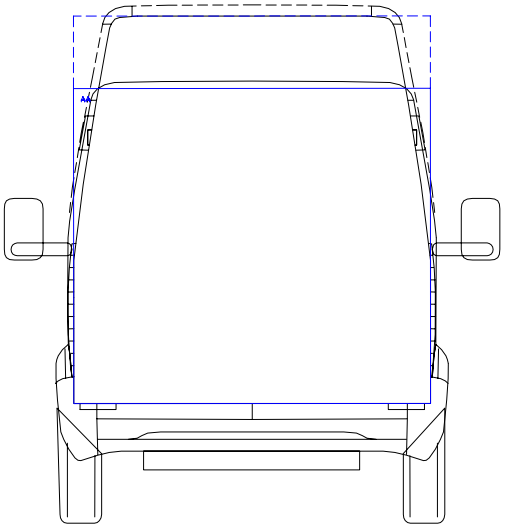

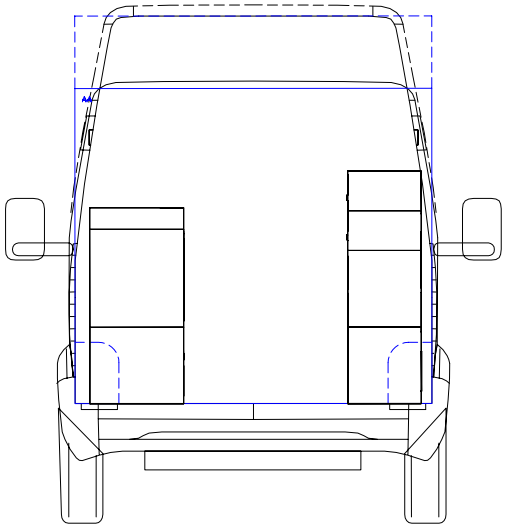

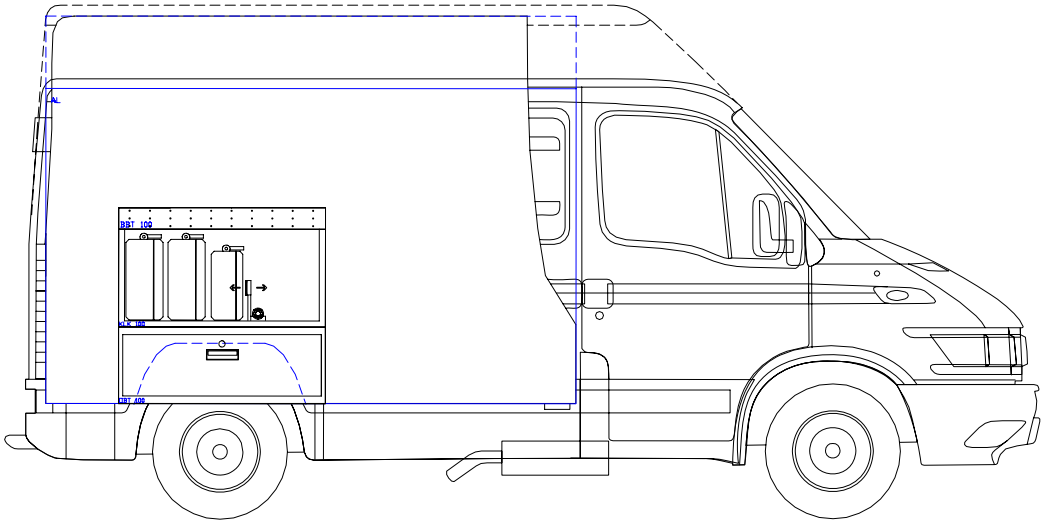

IV-DA-3000.dwg